MANABOTIX

Bunk Scanner system reference

Bunk Scanner system reference v0.0

3 April 2023

Contents

1. Document purpose ... 3
2. Introduction and brief background ... 3
3. System solution ... 3
3.1 Physical arrangement ... 4
3.2 Connectivity ... 4
3.3 Data flows ... 5
3.4 Reporting and integrations ... 5
4. Learning experiences shared by Client sites ... 6
5. Requirements from site ... 7
6. Standard commissioning process ... 7
7. Roles of involved parties ... 8
8. Maintenance ... 9
9. Service level agreement ... 9
10. More information ... 9
11. Intellectual property ... 10
Appendix A: Relevant reference reports ... 11
Appendix B: Drawings and parts ... 12
Appendix C: Network requirements from host site ... 13
Appendix D: Bunk Scanner FAQs ... 14
Appendix E: Bunk Scanner web application ... 16

1. Document purpose

This document intends to enable system understanding, installation, and interfacing of a Bunk Scanner for a new site implementation. A costed proposal for provision of the solution and service agreement will be supplied separately to Client on request.

2. Introduction and brief background

Feed bunk management is the process of determining feed allocation for pens of feedlot cattle for a 24-hour feeding cycle. Objectives of bunk management focus on consistently maximising feed intake, whilst minimising feed wastage and digestive disorders (bloat and acidosis).

Bunk calling is a critical input for this process, and the human callers' actions directly determine feed intake and carcase weight gain of pens of feedlot cattle. Automation of feed bunk management is now possible with advancements in mapping, sensors, and robotics technologies.

Enabled through levy-fund investment (and managed by MLA), Manabotix (**MBX**) has for the first time achieved an automatic bunk reading solution. Through the development cycle, the system's performances were assessed through rigorous and varied experimental processes under non-operational conditions across diverse feedlot geographies, as well as road and bunk designs and conditions. The results of these assessments demonstrated that the prototype Bunk Scanner provided highly repeatable and accurate bunk reads for all feed remaining quantities assessed. Moreover, the prototype consistently outperformed skilled human reads. Appendix A of this document includes final reports published by MLA supporting these findings.

Based on these outcomes, Manabotix has commercialised the Bunk Scanner system solution for the benefit of Australian lot feeders, and several are already in daily use within commercial operations.

3. System solution

The Bunk Scanner is a special arrangement of high-performance equipment and algorithms, integrated to provide accurate and precise feed remaining estimates in near real-time. At a very high level, the system solution is physically composed of the following key hardware components,

- **AutoSlide arm** mounted on host vehicle, including rover RTK GNSS satellite antenna (positioning), 2d lidar (to measure feed remaining in bunks), ranging laser (to measure arm position over bunk), motor (for slide actuations), and marshalling enclosure, which in turn includes satellite receiver, embedded (edge) processor, and motor driver.
- **Human-machine interface (HMI)** tablet computer installed in host vehicle's cabin, providing feedback to operator.
- **RTK GNSS base station** installed in a central location on site (usually at mill) to provide corrections to the rover equipment (specifically AutoSlide arm).

The following provides a brief and higher-level concept description with a view to meeting Client requirements. While some of the exact network connectivity, IT, and host vehicle interconnections are not known at the time of this document, within reason the Bunk Scanner system solution will be tailorable to meet almost all operating conditions.

3.1 Physical arrangement

Primarily the system employs a high-performance near-field lidar which scans bunk contents to measure and digitise during the normal operations of the host vehicle, usually the bunk calling host vehicle or utility (ute).

The current generation of Bunk Scanner is the AutoSlide model, which includes automatic extension over bunks, and then retraction (parking or stowing) when not in use; these movements will be configured in consultation with Client during commissioning process. The Bunk Scanner system supply also includes satellite-based positioning, bunk (and feed) perception lidar, communications, in-cabin HMI, and algorithms specific to the client site for calculating and reporting feed remaining predictions.

An installed AutoSlide arrangement is shown pictorially in Figure 1. This figure also includes a mechanical lock feature which has been provided on the Bunk Scanner arm to prevent unexpected movements when ute equipment is deenergised (power removed) and vehicle travels; lock is engaged and disengaged by twisting cam lever.

Figure 1: Installed Bunk Scanner AutoSlide. The subset image shows the arm's mechanical lock, to be engaged anytime rover equipment is deenergised (power removed) so that unexpected sliding movements are prevented.

Indicative parts and mechanical and electrical drawings are included in this document as Appendix B.

3.2 Connectivity

The solution will be configurable for almost all network arrangements, and the following probable network options are provided with a view to improving clarity of data transfer protocols,

1. **GSM or WiFi available across all/most of site**: Industrial edge processor communicates **continuously over-the-air** to the central server for all reporting. Minimal disruption to reporting.

2. **GSM or WiFi available in limited locations**: Industrial edge processor communicates **intermittently over-the-air** to the central server for all reporting. Some reporting delays may be incurred.
3. **No GSM or WiFi available**: Industrial edge processor will require **manual transfer of data** or **transfer via dedicated access point** to central server for all reporting. At times of engagement and commissioning MBX will consider options. Some reporting delays may be incurred.

Most sites will have a connectivity arrangement consistent with one of the bullet points in above list. Please note these connectivity options only relate to publications of Bunk Scanner read reports or remote access facility for MBX off-site support. These bullets do not include the UHF network from the RTK GNSS base station (providing corrections) to the Bunk Scanner, and this dedicated network will be included in MBX's standard supply.

Appendix B provides some drawings and schematics for use when installing Bunk Scanner equipment. Appendix C calls for network configurations required from the host site (if possible/available) for supplied equipment.

3.3 Data flows

Figure 2 provides a diagrammatic representation of the Bunk Scanner's dataflow from sources through to reporting interfaces, complete with relevant sensor and nominal user inputs.

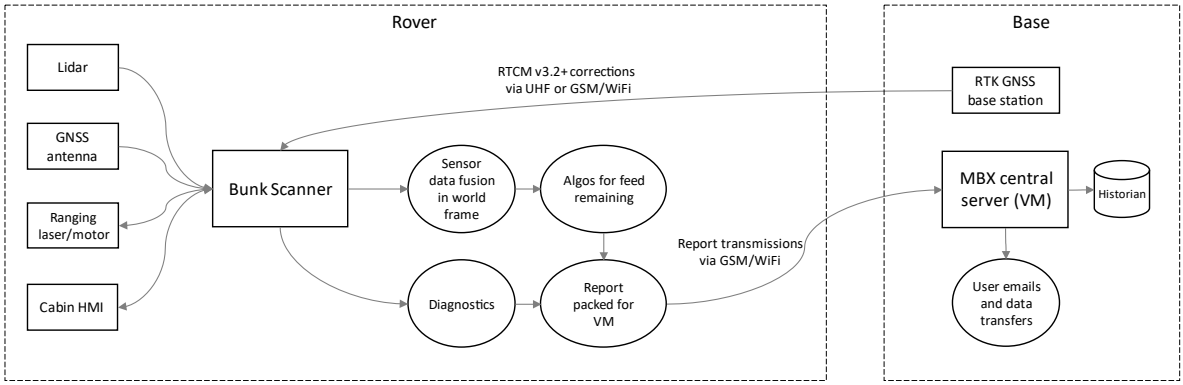

Figure 2: Diagrammatic representation of typical Bunk Scanner data flows.

The Bunk Scanner publishes a read report to a central server (virtual machine, VM, managed and maintained by MBX) when a preconfigured event is achieved; usually all bunks are completed and/or ute has been returned to mill office.

3.4 Reporting and integrations

The in-cabin HMI will present feed remaining prediction to light vehicle operator at end of each commissioned pen via a web application. Additional diagnostic and troubleshooting information are also presented.

More information about these outputs is shared in Appendix E of this document.

Figure 3: Indicative Bunk Scanner HMI installed inside host vehicle. More information about web application included in this document as Appendix E.

Options for integrations with 3rd party applications (e.g., Elynx Feedbunk, Micro Technologies' Accu-Trac, Genius) – as well as custom email reports directly from Bunk Scanner – are possible, and variants are **already operating in several commercial feedlots**.

Site-specific activities to support integration will be attended on a case-by-case basis, and in some cases the integrations may require new activity costings, and in others will be managed under the service level agreement.

4. Learning experiences shared by Client sites

MBX has sought advice from Client sites about key learning experiences relevant to the installation and operationalising activities for the Bunk Scanner system. The following represents higher-level advice and should be considered the most important components to increase likelihood of successful solution delivery.

Learnings include the importance of the following,

- Conducting the necessary **Workplace Risk Assessment and Control** (WRAC) processes for the installation and use of the system. WRAC processes require a relevant cross-section of the workforce and are generally a good environment for site actions to be recorded when the relevant stakeholders are present.
- A clear engagement strategy: that is, **persons responsible are held accountable** by Site Leadership Team for acting on the insights generated by the system.
- A defined **escalation process** for troubleshooting, updates, and feature requests. Site-specific Change of Management documentation or processes should support these requirements, and they ought to be completed in conjunction with the WRAC.
- An **estimate of additional resources required** (for example, boilermaker, electrician) to complete the project, so that necessary works may be appropriately budgeted, planned, scheduled, and executed accordingly.

5. Requirements from site

MBX will provide a detailed scope in a separate proposal, and this will include a list of requirements **from site before the system is operationalised**.

- Access to appropriate RTK GNSS base station to improve rover position accuracy. If appropriate base station is not available, alternative provision will be required, possibly including one optioned in MBX proposal.
    - If MBX supply a RTK GNSS base station, access to appropriate installation location. This is usually central and includes access to services such as power and network (if required).
- Confirmation that Manabotix remote access facility may access MBX RTK GNSS base station.
- Appropriate installation locations on vehicle and for base station (if required) complete with implementation of appropriate adapters and brackets (refer Section 6 for more details about suggested/recommended roles).
- Limited support for installation activities. Scope to be determined during preliminary site walk.
- Appropriate availability of host light vehicle for installation and commissioning activities. This ought to be achievable around normal feeding operations.
- Provision of custom protective cage around Bunk Scanner: Manabotix can provide examples, engineered drawings, and guidance as appropriate. Similarly possible reinforcement of light vehicle tray to improve stiffness of Bunk Scanner's connection.
- Mechanical protection for all cables with conduit (split/wrap) or equivalent.
- Appropriate engagement from client site representative/s for training and system usage.
- Email address details for relevant personnel to receive automated reports.
- **Maintenance of bunk roads**, including grading and removal of any vegetation, spilt feed, and/or other materials at toe of bunk (roadside). Vegetation growths must not exceed height of roadside top of bunk.
- **Bunks must be kept in good condition**. If bunks change (that is, upgraded, damaged) then some new baselines may be required to ensure system performances are maintained.

6. Standard commissioning process

At a very high-level, the commissioning activities will include the following tasks before the system is operationalised.

- **RTK GNSS base station installation** (in a central location complete with power and preferably network access, usually atop mill tower with clear, unobstructed view of sky) and static position configuration; based on site advice MBX will probably use Client's preferred sparky. This will all usually occur in the weeks before Bunk Scanner commissioning.
- **Install Bunk Scanner on site ute** (usually a dedicated allocator's vehicle, not a general purpose vehicle); again, this will usually happen in advance of commissioning, may include

any necessary tray stiffening (steel tray preferred) and cage fabrication, and these will be completed by site with MBX's instructions.

Then site commissioning will involve the following, with approximate durations,

- Test and commission Bunk Scanner with base station corrections (0.5-1.0d).
- Mapping (geo-fencing) the pen boundaries (0.5d); MBX will require access to the allocator ute.
- Complete empty pen baseline captures pre-feeding in mornings; this will require pens to be cleaned/empty/swept (1.0-2.0d). MBX will require access to the ute during this time.
- Training and handover of the Bunk Scanner (1.0d).

7. Roles of involved parties

Table 1 provides a brief description of parties and nominal roles for Bunk Scanner system implementation and support.

Table 1: Roles of parties for Bunk Scanner system implementation.

Party	Role
Manabotix	Project management for scoping, supply, and implementation stages. Site installation and commissioning support (provided remotely). Tiers 1, 2, 3, viz, basic help, in-depth technical support, and expert product support, respectively, for system. All software support under site-based service level agreement (see Section 9 of this document). New feature requests, including scoping and costing activities.
Client	Prerequisites as per Section 5 of this document. Most critically, product sponsor for end user client is required for single point of communications. On site labour and support for installation and commissioning activities (more details in the installation contractor section below). IT support for establishment of appropriate network connectivity, including allocation of IP address for RTK GNSS base station for configuration in factory. Tier 0 (self-service) support for most hardware-related issues with production system, usually based on diagnostics provided on HMI or web interface. It may also be pragmatic for client product sponsor on site to provide some Tier 1 (basic help) support, especially for hardware items. On request other site sponsor contact details may be shared with Client so that relevant recent experience may be shared and benefitted by new site.
Installation contractor (if required by Client)	To be engaged by Client to provide all installation activities. MBX suggests this improves likelihood of successful outcome, especially so preferred contractor is already inducted on site and familiar with local processes and contacts. Contractor will fabricate and install all additional adapters and brackets for equipment; MBX will be available to assist (onsite and remotely) for all appropriate stages. MBX understands from the pilot site that a two-person team (one electrical fitter plus one boilermaker) for up to two 6-hour windows should be sufficient for installation activities; this may occur after feeding on consecutive days. Several preliminary activities (e.g., fabrication of appropriate protective cage, etc.) may be undertaken ahead of nominal installation window.

8. Maintenance

Routine maintenance requirements are limited and have been summarised in Table 2.

Table 2: Suggested routine maintenance activities and suggested frequencies for Bunk Scanner system under normal operating conditions.

Description	Typical life	Maintenance
Fasteners	-	**ALL** fasteners shall be confirmed as retaining tensions weekly by operational personnel. If any fasteners are loose, thread locking adhesive shall be applied to cleaned surfaces before tensioning.
Lidar scanner and ranging laser	>7y	**Aperture cleaning after contamination events.** Firmware updates as required.
GNSS equipment	>7y	Firmware updates as required.
Industrial edge processing	>5y	Typical server maintenance and firmware updates.

9. Service level agreement

Table 3 has been provided to clarify the scope of the Bunk Scanner's mandatory service level agreement. Briefly the intention is to enable activities such as guaranteed responsiveness and operational firmware updates for an amortised fee over the life of the Bunk Scanner at a Client site. Note, hardware items out of warranty are not included in scope.

Table 3: Bunk Scanner service level agreement inclusions: price details available in quote. Scope does not include hardware items outside warranty terms.

Description	Performance target
Help desk support	Included
Call-out fee*	Included
Preventative maintenance visits (max per year) *	4
Included service days (max per month)	2
On-site response time (hours)	72
Firmware upgrades	Included
Designated support technician	Included

* Site-based activities to be supported by site-based sponsor.

10. More information

Appendix D of this document contains relevant FAQs and responses to aspects of the Bunk Scanner. Please advise site sponsor or Manabotix for additional advice.

Appendix B and E of this document contains a basic and preliminary system familiarisation for the Bunk Scanner.

11. Intellectual property

Bunk Scanner was developed in collaboration with Meat & Livestock Australia Limited. As the exclusive licensee, Manabotix has permission and support from MLA to commercialise Bunk Scanner with the terms provided at time of quotation.

Appendix A: Relevant reference reports

Table 4 lists relevant final reports generated during a variety of R&D activities. Report page links are provided to relevant MLA website addresses, alternatively project numbers may be used to access reports online at mla.com.au

Table 4: Final reports related to Bunk Scanner generated during R&D activities.

ID	Meat & Livestock Australia (MLA) project number and title	Link
1	B.FLT.0166 Prototype development for sensor technologies to automate feedlot bunk management	Report
2	B.FLT.7009 Feedlot Adoption - bunk scanner field trials	Report
3	B.FLT.1006 Prototype feedlot autonomous mobile robot for bunk calling	Report
4	B.FLT.1012 Evaluation of automated bunk management – feedlot cattle performance	Report

Appendix B: Drawings and parts

The following table lists relevant mechanical arrangement and electrical drawings for the Bunk Scanner.

Table 5: Provided drawings for Bunk Scanner.

ID	MBX drawing no.	Description
1	10382	Bunk Scanner AutoSlide general arrangement. Bunk Scanner will be connected to the tray of Client's preferred vehicle via six bolts and through-holes.
2	10463	Guard arrangement (not included in standard MBX supply). Workshop drawings available on request for use by Client.
3	10608	Nominal location for the Bunk Scanner over a bunk.
4	90000_001	RTK GNSS base station schematic and installation examples.

Table 6 contains key electrical equipment and additional IT information for one Bunk Scanner system.

Table 6: Key electrical equipment and additional IT information for one Bunk Scanner, complete with parts, quantities (per system), and responsible parties. Note, base station equipment not included in BOM: refer to provided drawing.

ID	Item	PN	Qty	Responsible	Notes
1	Lidar		1	MBX	Key specs: **Eye-safe**, mean active filter enabled, scanning frequency 300Hz, angular resolution 0.0833°, scan range (internal angle) 70°, distance 0.7-3.0m.
2	Lidar power cable		1	MBX	Angled M12 to Milspec.
3	Lidar data cable		1	MBX	Angled M12 to Milspec.
4	GNSS antenna	90000	1	MBX	
5	GNSS antenna coaxial cable		1	MBX	RG58C/U coaxial cable, TNC to TNC.
6	Ranging laser		1	MBX	
7	Ranging laser composite cable		1	MBX	Angled M12 to Milspec.
8	Enclosure		1	MBX	Includes edge processor, RTK GNSS receiver.
9	Enclosure power cable		1	MBX	~5m, Milspec to fly leads, usually connected to ute accessories.
10	Enclosure data cable		1	MBX	~5m, Milspec to RJ45, to HMI.
11	HMI		1	MBX	Includes RAM mounts.
12	Remote access to RTK GNSS base station	Site preferred VPN service	1	Client	Only if available.
13	Remote access to rover	MBX VPN via GSM SIM	1	MBX	Alternate access options may be considered in consultation with Client.

ITEM NO.	PART NUMBER	VENDOR	DESCRIPTION	QTY.
1	10001		BASE BRACKET - REAR	1
2	10388		ENCLOSURE MOUNTING PLATE	1
3	10003		END PLATE	1
4	10498		BASE BRACKET - FRONT	1
5	10034		CLAMP PLATE	3
6	10082		GASKET	1
7	10083		GASKET	3
8	10084		GASKET	1
9	10308		BUNK SCANNER AS ASSEMBLY	1
10	10326		MOUNTING BRACKET	1
11	10386		ENCLOSURE - USA	1
12	10381	REXROTH	MODIFIED STRUT PROFILE	1
13	3842548877	REXROTH	PROFILE COVER STRIP 10mm T-SLOT	AR
14	3842526564	REXROTH	CABLE BRACKET, N10	3
15	3842530285	REXROTH	T-NUT 10mm x M6	4
16	1505-503	SHOP4FASTENERS	THREAD INSERT M12 - M8 x 15	4
17	233-685	RS COMPONENTS	CABLE TIE MOUNT	2
18	-		SCREW HEXAGON HEAD ISO 4017 M12 x 080	6
19	-		SCREW SOCKET CAP HEAD ISO 4762 M12 x 030	4
20	-		SCREW SOCKET CAP HEAD ISO 4762 M8 x 030	4
21	-		SCREW SOCKET BUTTON HEAD ISO 7380 M6 x 008	2
22	-		SCREW SOCKET BUTTON HEAD ISO 7380 M8 x 016	4
23	-		SCREW SOCKET BUTTON HEAD ISO 7380 M6 x 025	4
24	-		NUT HEXAGON HEAD ISO 4032 M12	6
25	-		NUT HEXAGON HEAD ISO 4032 M5	4
26	-		NUT HEXAGON HEAD NYLOC ISO 7040 M8	12
27	-		WASHER FLAT ISO 7089 M12	16
28	-		WASHER FLAT ISO 7089 M8	24
29	-		WASHER FLAT ISO 7089 M6	4
30	-		WASHER SPRING ISO 7980 M12	10
31	-		WASHER SPRING ISO 7980 M8	4
32	-		WASHER SPRING ISO 7980 M6	4
33	-		WASHER FLAT ISO 7089 M5	4
34	-		WASHER SPRING ISO 7980 M5	4
35	-		SCREW SOCKET BUTTON HEAD ISO 7380 M5 x 016	4
36	-		BOLT HEXAGON HEAD ISO 4014 M8 x 110	8
37	-		WASHER FLAT LARGE ISO 7093 M8	4

DIMENSIONS IN MILLIMETRES | DO NOT SCALE | 3RD ANGLE PROJECTION

ASSEMBLY INSTRUCTIONS

- ALL FASTENERS SHALL BE 316 SS (A4-70).
- ALL BOLTS AND SCREWS WHICH EMPLOY A MEANS OF ANTI-VIBRATION LOCKING (i.e. NYLOC NUTS OR SPRING WASHERS) SHALL BE INSTALLED WITH TEF-GEL.
- ALL BOLTS AND SCREWS WHICH DO NOT EMPLOY A MEANS OF ANTI-VIBRATION LOCKING (i.e. NYLOC NUTS OR SPRING WASHERS) SHALL BE INSTALLED WITH LOCTITE 222 (FOR THREADS < 6mm DIAMETER) OR 242 (FOR THREADS >= 6mm DIAMETER).
- ALL T-NUTS SHALL BE INSTALLED WITH LOCTITE 242.

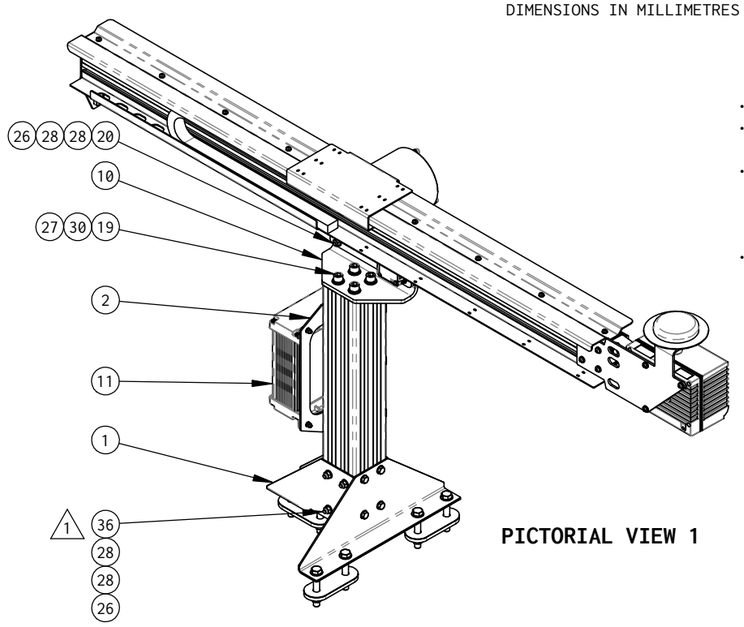

PICTORIAL VIEW 1

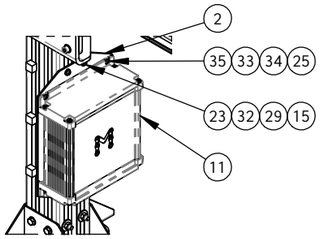

PICTORIAL VIEW 4

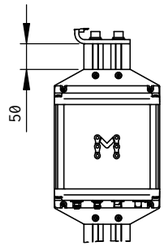

ENCLOSURE MOUNTING

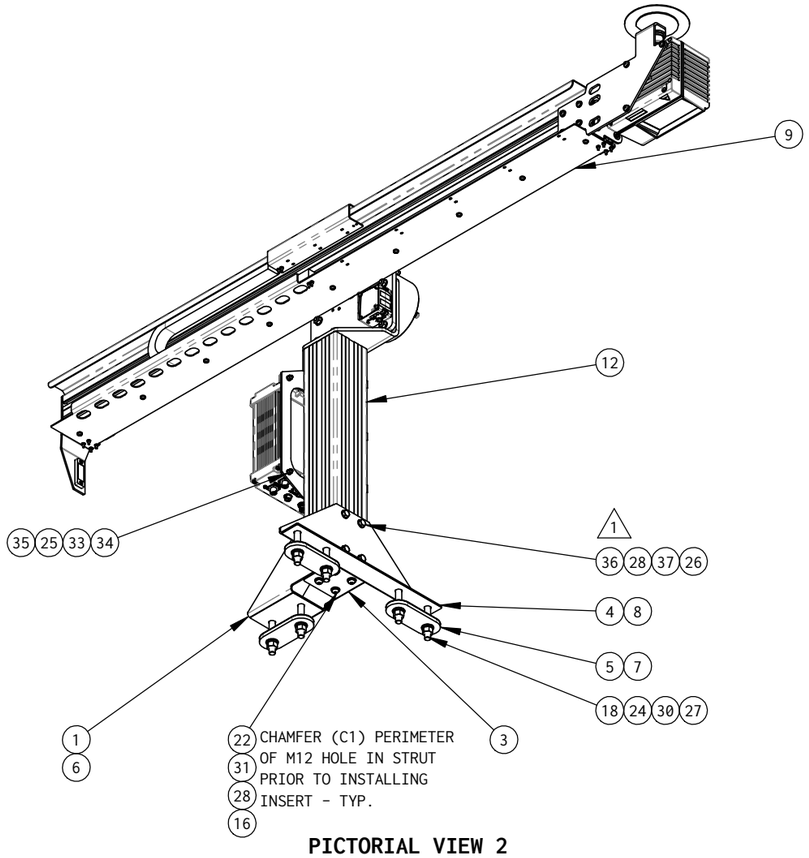

PICTORIAL VIEW 2

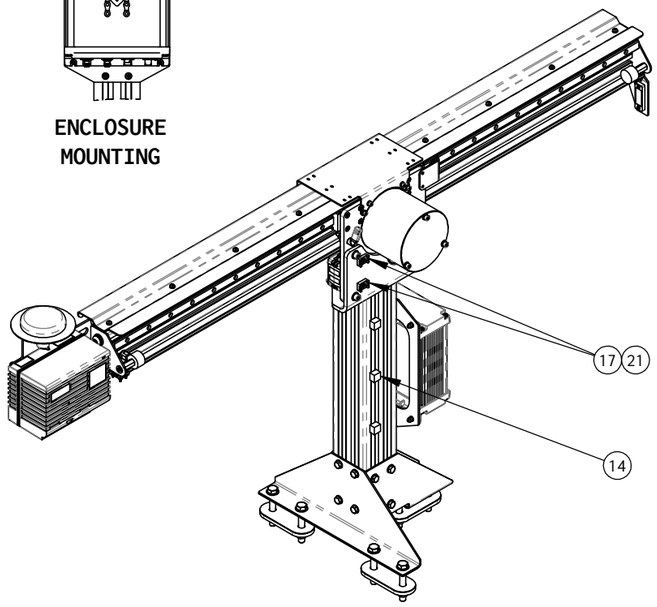

PICTORIAL VIEW 3

REV.	DESCRIPTION	DATE
1	THROUGH BOLTS ADDED	2023-03-06

REVISIONS

MANABOTIX

BUNK SCANNER AS
GENERAL ARRANGEMENT

1 | RELEASED 2023-03-06 DAN LANIGAN | SHT 1 OF 1 | 10382

FOR MANUFACTURE 2023-03-06

10382

Manabotix Pty Ltd ABN: 71 614 498 501 GPO Box 2339, Brisbane Q 4001 +61 408 981 388 info@manabotix.com

DIMENSIONS IN MILLIMETRES | DO NOT SCALE | 3RD ANGLE PROJECTION

ITEM NO.	PART NUMBER	DESCRIPTION	QTY.
1	10350	GUARD BASE FRAME	1
2	10351	GUARD	1
3	-	WASHER FLAT ISO 7089 M8	6
4	-	WASHER SPRING ISO 7980 M8	6
5	-	BOLT HEXAGON HEAD ISO 4014 M8 x 040	6

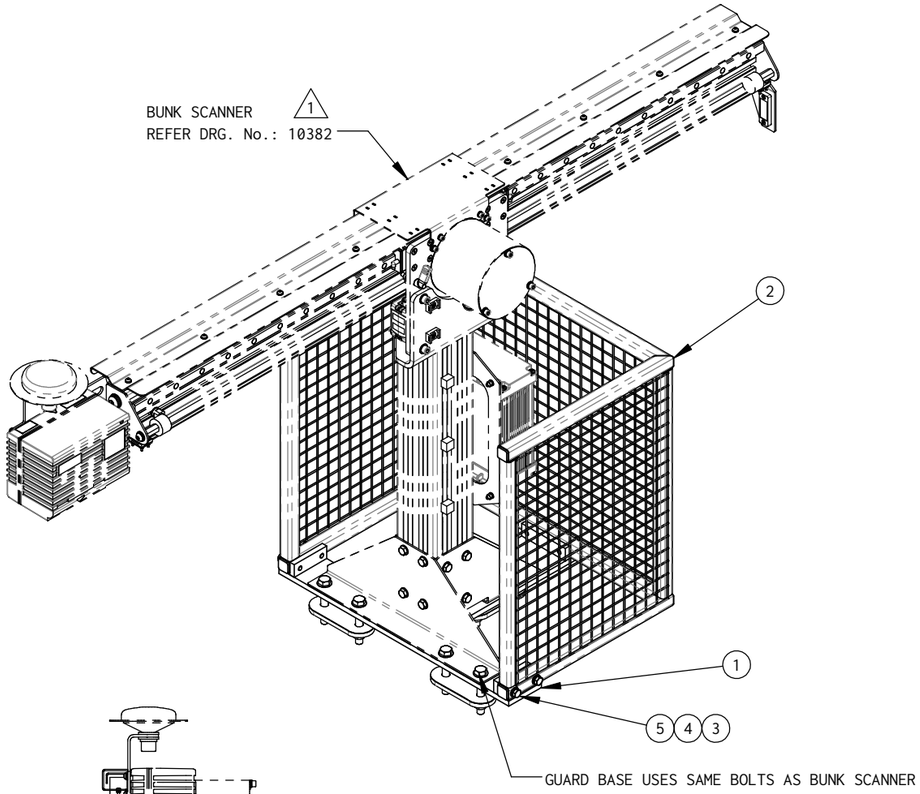

PICTORIAL VIEW

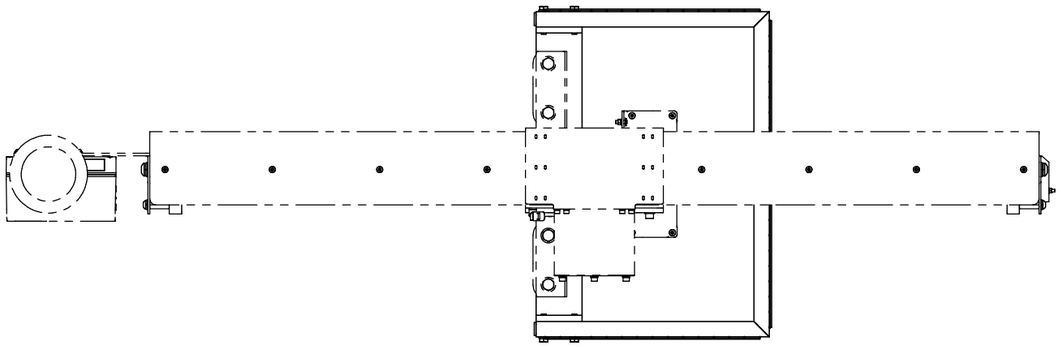

TOP VIEW

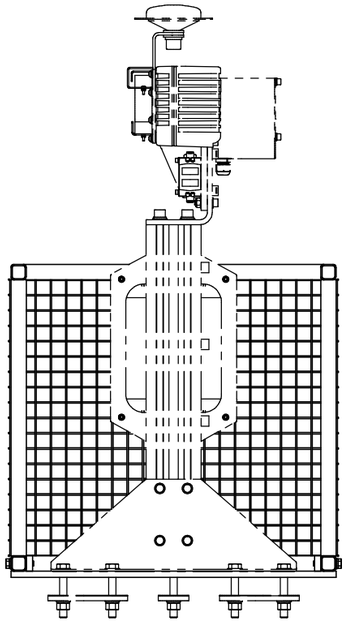

FRONT VIEW

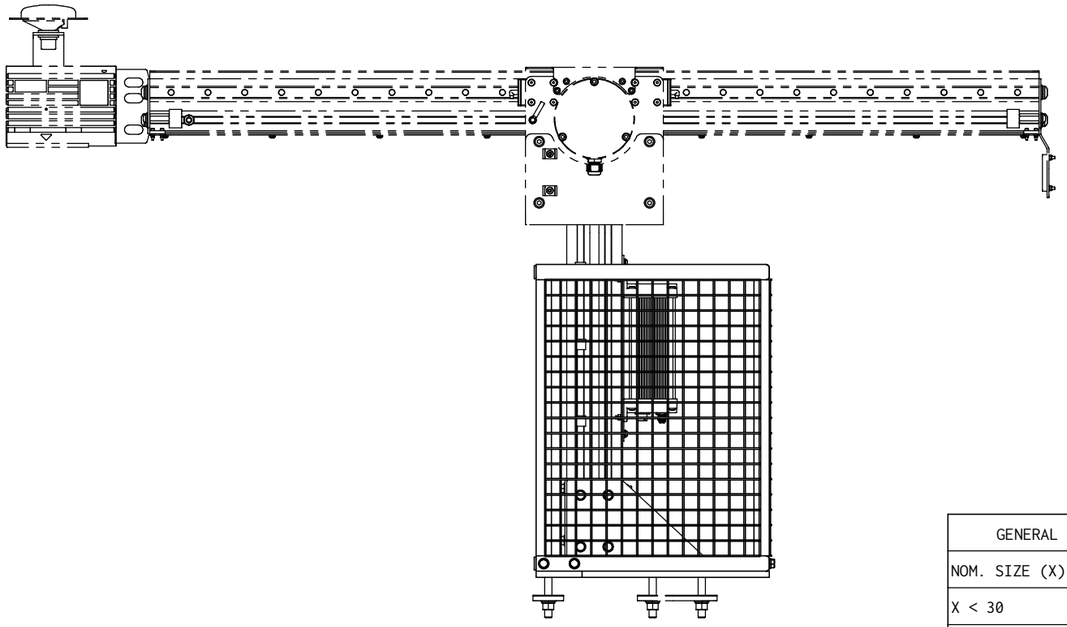

SIDE VIEW

GENERAL TOLERANCES	
NOM. SIZE (X)	TOLERANCE
X < 30	±0.2
30 < X < 120	±0.3
120 < X < 400	±0.5
400 < X	±1.0

MANABOTIX

BUNK SCANNER AS
GUARD ARRANGEMENT

1 | RELEASED 2022-04-05 DAN LANIGAN | SHT 1 OF 1 | 10463

FOR MANUFACTURE 2023-03-27

10463

DIMENSIONS IN MILLIMETRES | DO NOT SCALE | 3RD ANGLE PROJECTION

ITEM NO.	PART NUMBER	VENDOR	DESCRIPTION	QTY.
1	10382	MANABOTIX	BUNK SCANNER AS ASSEMBLY	1
2	10349	MANABOTIX	GUARD ARRANGEMENT	1
3	-	MANABOTIX	HMI PANEL	1

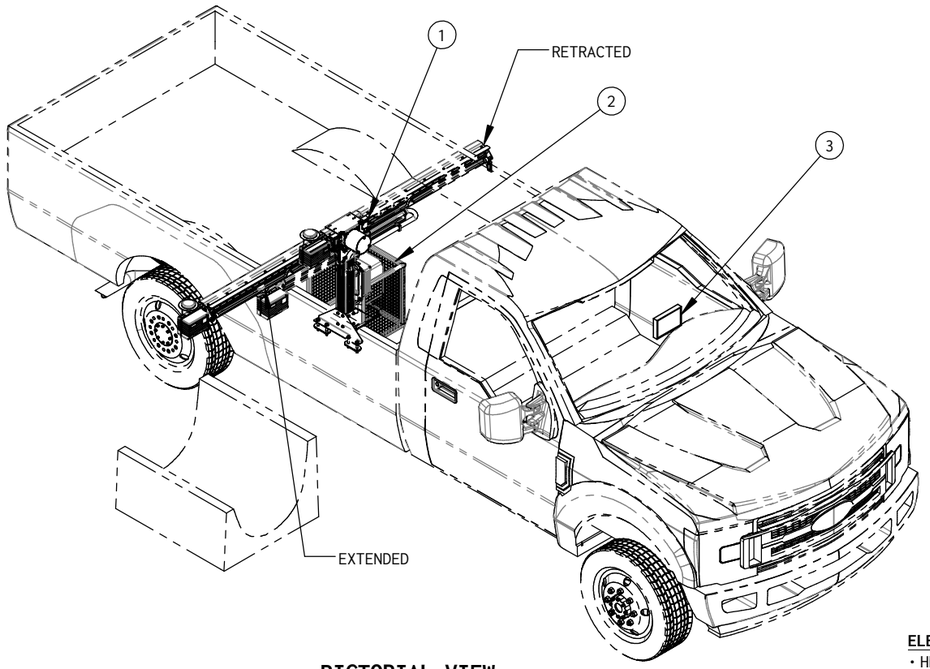

PICTORIAL VIEW

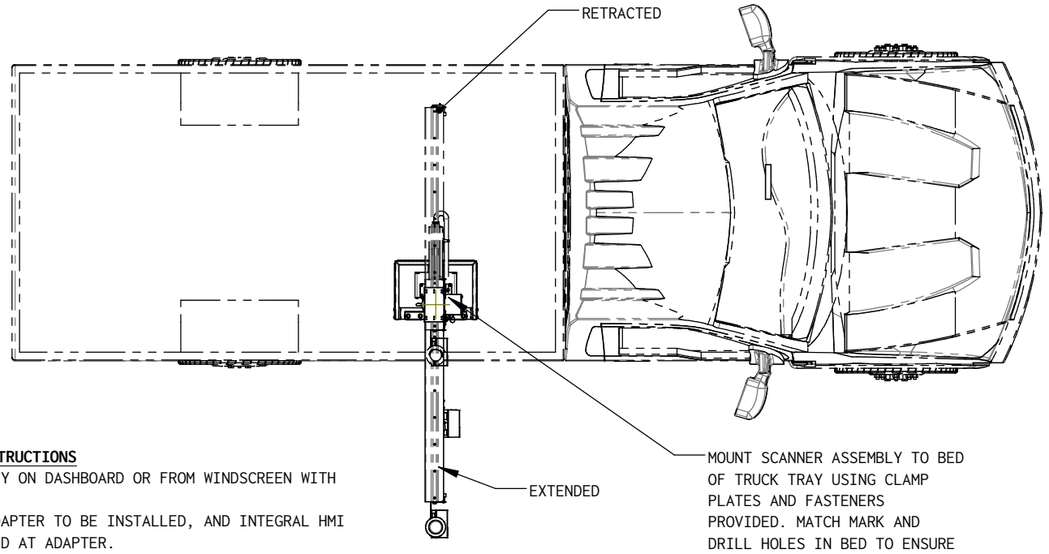

PLAN VIEW

MOUNT SCANNER ASSEMBLY TO BED OF TRUCK TRAY USING CLAMP PLATES AND FASTENERS PROVIDED. MATCH MARK AND DRILL HOLES IN BED TO ENSURE ALIGNMENT. ENSURE CHOSEN LOCATION PROVIDES VEHICLE CAB PROTECTION OF THE LIDAR BOOM IN THE RETRACTED POSITION.

ELECTRICAL INSTALLATION INSTRUCTIONS

- HMI TO BE INSTALLED RIGIDLY ON DASHBOARD OR FROM WINDSCREEN WITH PROVIDED MOUNTING BRACKET.
- CIGARETTE LIGHTER POWER ADAPTER TO BE INSTALLED, AND INTEGRAL HMI POWER CABLE THEN TERMINATED AT ADAPTER.
- ETHERNET CABLE TO BE ROUTED BETWEEN HMI AND BUNK SCANNER ENCLOSURE, SECURED APPROPRIATELY ALONG LENGTH, AND TERMINATED AT EACH END'S DATA PORT.
- 12VDC BATTERY POWER INPUT FROM VEHICLE ACCESSORIES LINE TO BUNK SCANNER ENCLOSURE WITH 2C CABLE, MINIMUM 2.5mm2 PER CORE; OPTION: CIRCUIT PROTECTION WITH IN-LINE FUSE (>=5A CAPACITY).

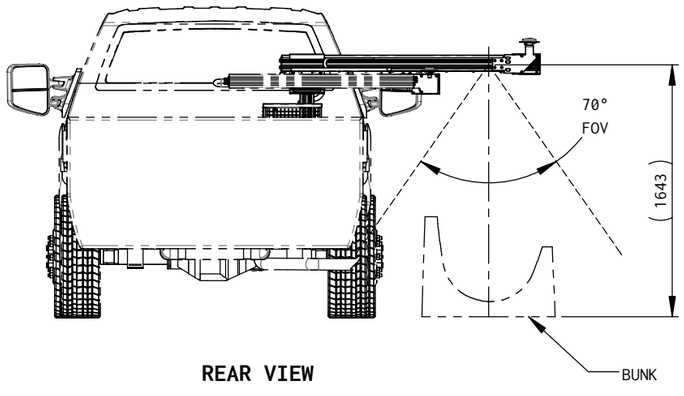

REAR VIEW

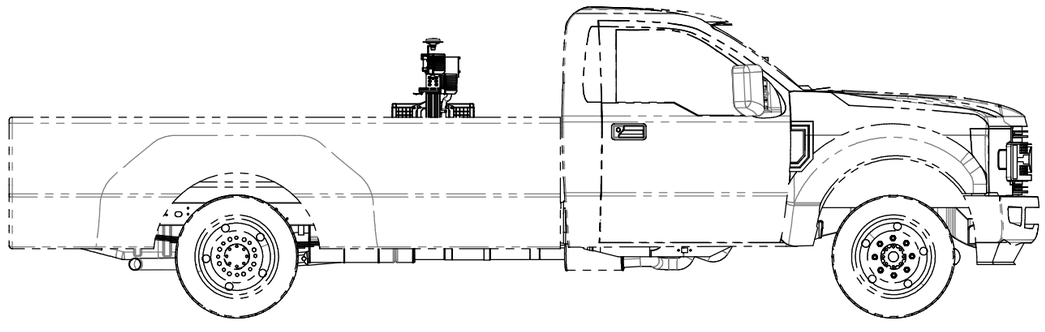

SIDE VIEW

MANABOTIX

BUNK SCANNER AS
UTE INSTALLATION ASSEMBLY

0	RELEASED 2023-03-02 DAN LANIGAN	SHT 1 OF 1	10608

FOR INFORMATION 2023-03-02

10608

Manabotix Pty Ltd ABN: 71 614 498 501 GPO Box 2339, Brisbane Q 4001 +61 408 981 388 info@manabotix.com

ITEM NO.	DESCRIPTION	LENGTH	QTY.	SUPPLIER
1	MANABOTIX BASE STATION ENCLOSURE	-	1	MANABOTIX
2	GNSS ANTENNA	-	1	MANABOTIX
3	GNSS ANTENNA MOUNT, 5/8” UNC THREADED ROD	600mm	1	OTHERS
4	UHF ANTENNA, 6dBI OMNIDIRECTIONAL	-	1	MANABOTIX
5	RG58C/U OR RG58A/U STRANDED COAXIAL CABLE FOR RUNS LESS THAN 30m LMR400/CLF400 OR EQUIVALENT COAXIAL CABLE FOR RUNS GREATER THAN 30m	AR	2	OTHERS
6	5/8” UNC FLAT WASHER	-	1	OTHERS
7	2C+E, 1.5mm^2 CU/PVC/CU	AR	1	OTHERS
8	BASE STATION POWER CABLE, M12 TO FLY LEADS	5m	1	MANABOTIX
9	TNC PLUG, STRAIGHT, SUITABLE FOR RG58A/U AND RG58C/U	-	3	MANABOTIX
10	240VAC TO 12VDC @ 1.25A PSU, MEAN WELL HDR-15-12	-	1	MANABOTIX
11	CABLE (FLEX) METAL CONDUIT	AR	AR	OTHERS
12	UHF ANTENNA MOUNTING BRACKET	-	1	OTHERS
13	LIGHTNING ARRESTOR	-	1	OTHERS
14	N-TYPE PLUG, STRAIGHT, SUITABLE FOR RG58A/U AD RG58C/U	-	1	MANABOTIX
15	1C 2.5mm^2 EARTH CONDUCTOR, CU/PVC	AR	1	OTHERS
16	COPPER EARTH ROD	1,200mm	1	OTHERS
17	5/8” UNC SPING WASHER	-	1	OTHERS
18	5/8” UNC NUT	-	1	OTHERS
19	ETHERNET CABLE, CAT5E	AR	1	OTHERS

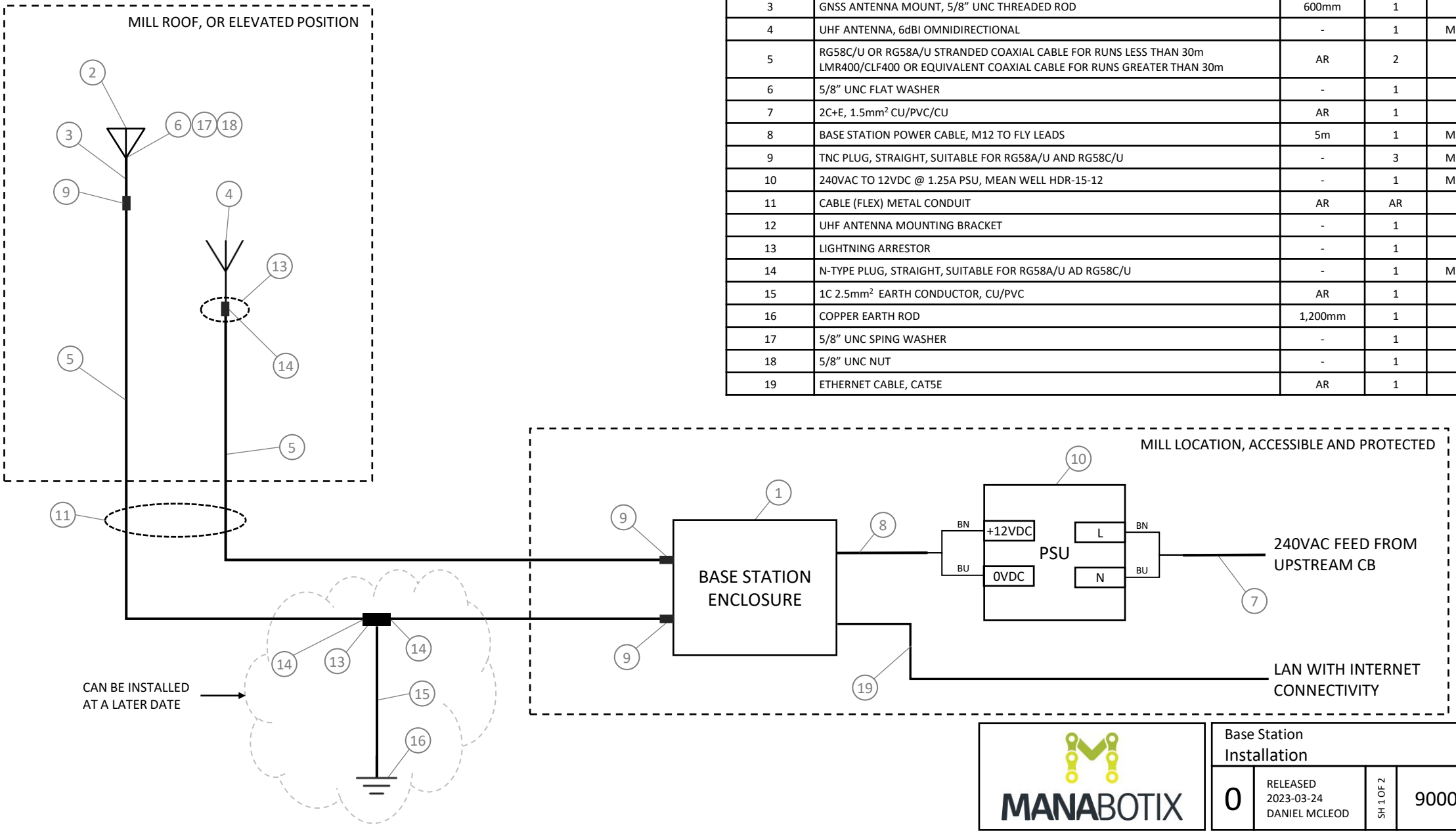

MANABOTIX

Base Station Installation

0	RELEASED 2023-03-24 DANIEL MCLEOD	SH 1 OF 2	90000-001

Manabotix Pty Ltd | ABN 71 614 498 501 | Level 7 320 Adelaide Street Brisbane Q 4000 | +61 408 981 388 | gday@manabotix.com

GNSS ANTENNAS: CLEAR UNOBSTRUCTED VIEWS OF SKY

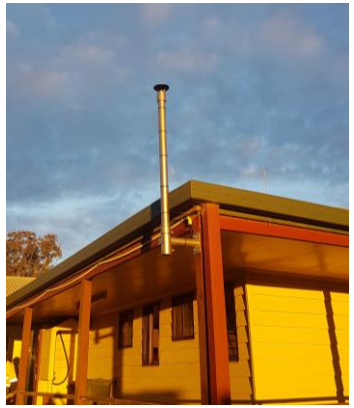

UHF ANTENNAS: 1x OMNI-DIRECTIONAL, INSTALLED VERTICALLY

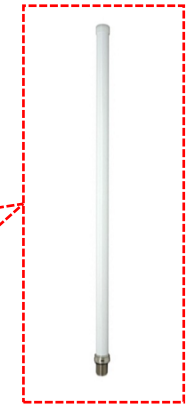

NOTE: DUAL 5dBI UHF ANTENNA ARRANGEMENT (SHOWN IN PHOTOS) HAS BEEN REPLACED WITH A SINGLE 6dBi OMNI DIRECTIONAL ANTENNA

NOTE: ANTENNA CABLES TO BE MECHANICALLY PROTECTED WITH METAL CONDUIT TO PREVENT BIRD DAMAGE

ANTENNA BRACKET BRACING: GNSS ANTENNA SHOULD HAVE LITTLE MOVEMENT AS POSSIBLE WHEN INSTALLED; NOTE STRUCTURE DOES NOT NEED TO BE AS TALL AS SHOWN IN IMAGE, RATHER IT SHOULD BE AT LEAST 300mm HIGHER THAN TOP HANDRAIL, OR ANY OTHER NEARBY INSTALLATION

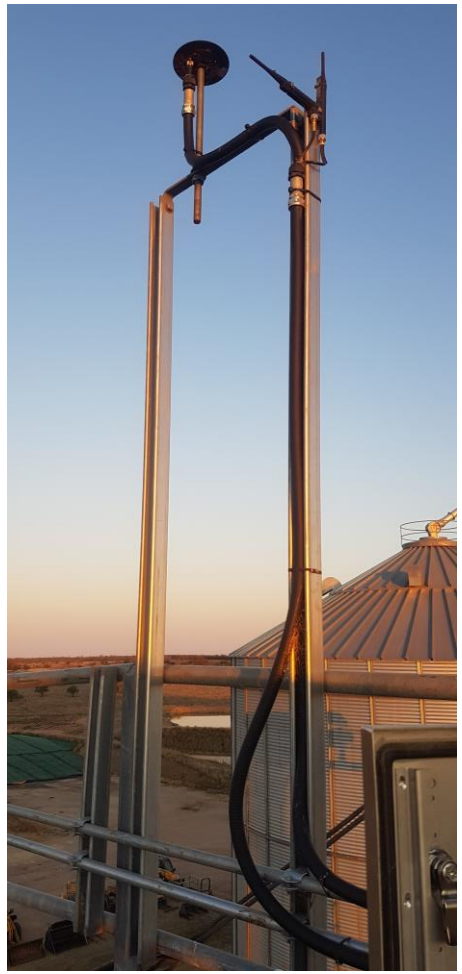

MANABOTIX

Base Station Antenna mounting examples			
0	RELEASED 2023-03-24 DANIEL MCLEOD	SH 2 OF 2	90000-001

Manabotix Pty Ltd | ABN 71 614 498 501 | Level 7 320 Adelaide Street Brisbane Q 4000 | +61 408 981 388 | gday@manabotix.com

Appendix C: Network requirements from host site

Table 7 lists network configuration requirements for the Bunk Scanner's RTK GNSS base station, which (if available) will be provided by the host site. Preferably these will be provided very early in the delivery programme, so these may be implemented during factory preparations. If these provisions are not possible, other options may be considered (e.g., GSM SIM card).

Table 7: Network requirements from host site for RTK GNSS base station.

RTK GNSS base station		
1	IP address	
2	Subnet mask	
3	Gateway	

Table 8 lists sub-network settings for Bunk Scanner equipment, provided for information only.

Table 8: Sub-network settings for Bunk Scanner equipment, provided for information only.

Rover enclosure 1		
1	IP address	192.168.0.100
2	Subnet mask	255.255.255.0
3	Gateway	Nil
Rover enclosure 2		
1	IP address	192.168.1.100
2	Subnet mask	255.255.255.0
3	Gateway	Nil
Rover lidar		
1	IP address	192.168.0.11
2	Subnet mask	255.255.255.0
3	Gateway	Nil

The Bunk Scanner rover equipment will usually also be provided with a GSM SIM card for remote access by MBX (via secure VPN). If this access is required, and network access to Bunk Scanner is intermittent, MBX may ask for site assistance to relocate/park ute in a location with adequate coverage whilst investigations or data transfers are undertaken.

Appendix D: Bunk Scanner FAQs

Table 9 lists FAQs and responses with a view to improving understanding of the Bunk Scanner.

Table 9: FAQs and responses for Bunk Scanner.

ID	Question	Response
1	Our feedlot is different! Will the Bunk Scanner work with our range of bunk designs (some are damaged), and our roads are sometimes rough?	The prototype Bunk Scanner was developed and validated across several disparate feedlot arrangements, and consistently demonstrated that high quality reads were possible under all operating conditions (day or night), and these reads outperformed highly skilled humans. Since these development times the Bunk Scanner has been implemented across many feedlots in Australia and North America, and with the onboarding of each new site the technology is improved to be more robust. Briefly, there are very few operating conditions which we have not yet encountered and managed!
2	Can the Bunk Scanner be used in the rain?	Yes, all equipment is weatherproof. Please note, the outputs of the system will read all remaining bunk contents, so pooled water will be counted as feed. The bunk calling operator will still need to use discretion in wet conditions to either accept or reject feed remaining data.
3	What is the maximum speed for scanning?	Maximum recommended speed is shown as a target value on the HMI (and as shown in Figure 4). Most Clients drive the host vehicle around 20km/h which is usually acceptable.
4	How does the Bunk Scanner deal with cattle heads above the bunk?	Bunk reads are possible through line of site, and this will be the case for humans or technology. In our experience the cattle will usually withdraw (or not be attending bunk) when the Bunk Scanner passes. In the cases when cattle heads (or other obstructions) interfere with reading, the Bunk Scanner's algorithms automatically identify and exclude this bunk section whilst maintaining high quality reads.
5	How are read reports communicated from the Bunk Scanner to the server?	The Bunk Scanner will need to connect to a network (e.g., sitewide WiFi, GSM, etc.) per options provided in Section 3.2 of this document for reports to be transmitted; file sizes are usually <30kB. If network is not available, the reports will be retained on the Bunk Scanner for later transmission or retrieval.
6	What is contained in a read report?	The data contained in reports will be timestamped volumes and nominal feed masses (by ration type) per pen. Read quality feedback per pen is provided too; also indicating possible corrective actions if reads are not satisfactorily completed.
7	What support is required from the host site?	Section 5 of this document includes a detailed list of standard requirements from Client site. The key support requirements are briefly provided again, • Network configurations (if available) will be required early in the programme, preferably for factory implementation. • Installation and commissioning support. • Tier 0 (self-service) support for most hardware-related issues with production system, usually based on diagnostics provided on web interface (address included in Appendix E of this document).

ID	Question	Response
8	What if the Bunk Scanner has a breakdown?	Several controls and responses are recommended or required. • ALL Bunk Scanners will have a mandatory service agreement between MBX and the Client site to enable system performance reviews, firmware updates, preventative maintenance advice and assistance, as well as prompt breakdown response. • A spares strategy may be developed between MBX and Client to reduce downtime. • And if all controls fail, Client site may need to revert to manual reads until Bunk Scanner is returned to service.
9	Can the Bunk Scanner be transferred between allocator vehicles?	Yes. This is a simple process as the Bunk Scanner has only a few mechanical and electrical interfaces. If this is a likely requirement, then proactivity may be considered by Client to transfer Bunk Scanner simply between vehicles, taking care to ensure the new host vehicle is suitable: especially tray height and stiffness (per Sections 5 and 6 of this document), as well as maintaining Bunk Scanner arm's nominal position over bunks.

Appendix E: Bunk Scanner web application

A web application has been provided for use by operational personnel, and its outputs will also be critical for maintenance and support. The app may be accessed via a Chromium-based browser connected to same network as the Bunk Scanner with the following URL: **http://<rover IP address>:8109**

The web application is available to the bunk caller on the HMI provided in the ute cabin. Figure 4 shows a typical output shown on the HMI/web application.

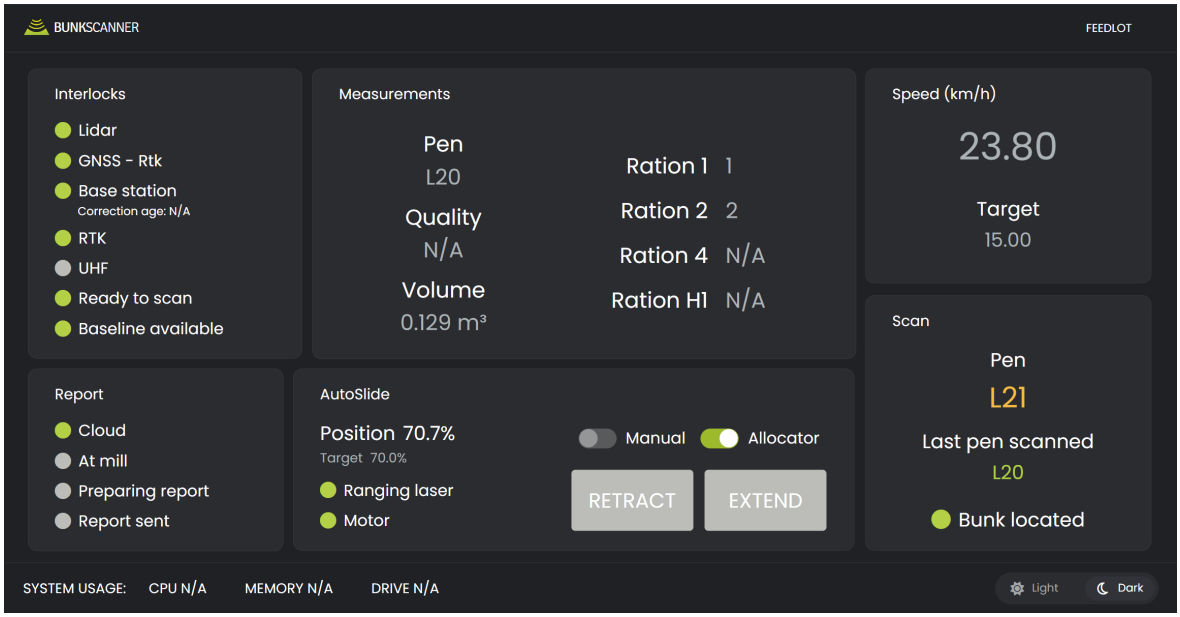

Figure 4: Demonstrative screenshot from Bunk Scanner web application.

Table 10 provides more information about important components of this interface,

Table 10: Bunk Scanner web application key features.

Feature group	Purpose
Interlocks	System statuses that ALL must be healthy (indicated by green light) so that Bunk Scanner may operate. As can be seen, there are many disparate **prerequisite conditions which must be met for a read to be provided**. Failure for a light to be green should provide an instructive start for simple (tier 0) troubleshooting.
Measurement	Contains current pen, (volume) read quality information, as well as masses remaining by ration.
Speed	Current speed in km/h against nominal target value.
Report	Progressive indications of report transmission. ALL lights must be green to ensure report is sent before vehicle is deenergised.
AutoSlide	Status feedback indicators and Bunk Scanner AutoSlide's arm position versus configured target extension for current pen) as movements. Bunk Scanner **must have Allocator mode enabled to work!** Manual operation of AutoSlide will usually not be used, and in these exceptional circumstances must only be used with care to reduce likelihood of collision incidents.
Scan	Additional feedback about currently located pen and bunk in lidar's field of view.